GROVE®

Lift Solutions

ALL-TERRAIN CRANES

Version 004

Content

LSAT A001	COUNTERWEIGHT	3
LSAT A002	EXTERNAL JUMP START CABLE	4
LSAT A003	SUPPORT PLATES	5
LSAT A004	RIGGING ADAPTER	6
LSAT A009	RIGGING ADAPTER	7
LSAT A006	HOSE TO INFLATE TYRE	8
LSAT A007	COOLING BOX	9
LSAT A008	VACUUM CLEANER	10
LSAT A010	SEAT VOVERS	11
LSAT A011	ADBLUE CANISTER STORAGE	12
LSAT A012	WEDGE SOCKET	13
LSAT A013	EXTERNAL JUMP START CABLE WITH CLAMPS	14
LSAT A014	FLOOR MATS	15
LSAT A015	COUNTERWEIGHT ADAPTER	16
LSAT A016	FOLDABLE RAILINGS ON THE AUXILIARY HOIST	17
LSAT B008	ROPE PULLEY ON THE BOOM	18
LSAT A017	PENDANT SPOTLIGHT	19
LSAT C010	DRIVER CAB INSULATION INTERIOR	20
LSAT C016	FIRE SUPPRESSION SYSTEM FOR ENGINE	21
LSAT C020	RETRACTABLE FIELD LIGHTING	22
LSAT C021	WINTER TYRES	23
LSAT A018	COFFEE MACHINE	24
LSAT A019	ADDITIONAL STORAGE BOX	25
LSAT A020	SMALL JUMP START SOCKET	26
LSAT S002	COUNTERWEIGHT DETECTION	27
LSAT S003	SCREEN SUN PROTECTION FILM	28
LSAT S008	EXTENDIBLE STEP TREAD	29
LSAT S016	TRAY	30
LSAT S018	FRONT VIEW CAMERA	31
LSAT S021	AUX HOIST ADAPTER	32
LSAT Z004	BIO HYDRAULIC OIL	33
LSAT A021	SPECIAL DRIVING CONDITION GMK6300L-1	34
LSAT A022	SPECIAL DRIVING CONDITION GMK5250XL-1	35
LSAT A023	BI-LED HEADLIGHTS	36
LSAT A024	HEAVY AXLE LOADS	37
LSAT A025	BATTERY ISOLATOR	38
LSAT A026	LITTLE HOME	39

Description

Customized customer logo on the counterweight.

Existing Models

GMK6400-1

Notes

For pricing and lead time, please contact your local dealer or the Lift Solutions Team with specific product requirements.

EXTERNAL JUMP START CABLE

Description

Jump start cable for external starting 12 m long with wire cross section of 70 mm².

Existing Models

All GMK's

Notes

For pricing and lead time, please contact your local dealer or the Lift Solutions Team with specific product requirements.

Description

Support plates steel or plastic.

Existing Models

GMK3050–GMK7450

Notes

For pricing and lead time, please contact your local dealer or the Lift Solutions Team with specific product requirements.

RIGGING ADAPTER

Description

Adapter for rigging baseplate together with 9,5 to counterweight plate.

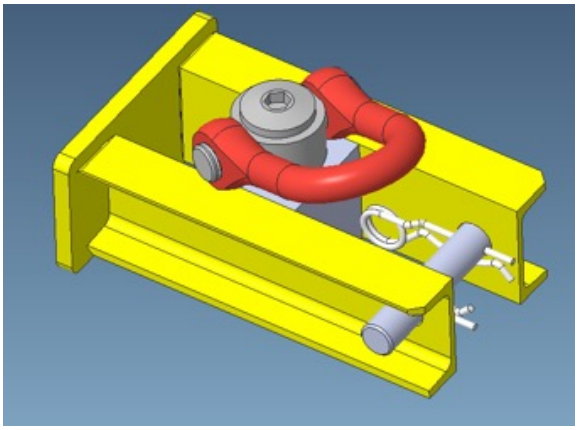

Existing Models

GMK6300L-1

Notes

For pricing and lead time, please contact your local dealer or the Lift Solutions Team with specific product requirements.

Description

Adapter for rigging baseplate together other counterweight plates up to 21 t.

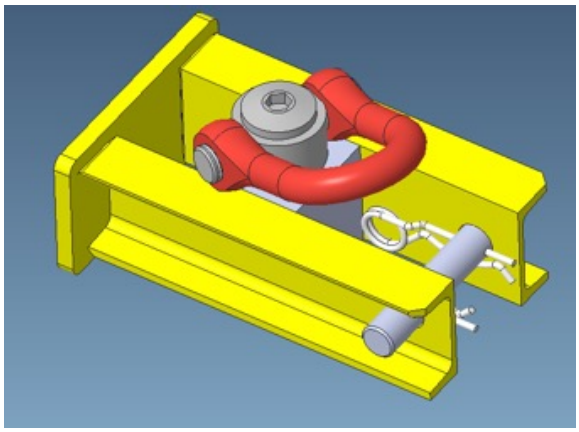

Existing Models

GMK5120L/GMK5150-1/GMK5150L-1/GMK5150XL

Notes

For pricing and lead time, please contact your local dealer or the Lift Solutions Team with specific product requirements.

HOSE TO INFLATE TYRE

Description

Hose to inflate tyre with pressure range of 0-16 bar and hose length of 15 Meter fitting to air boiler.

Existing Models

All GMK's

Notes

For pricing and lead time, please contact your local dealer or the Lift Solutions Team with specific product requirements.

Description

24V cooling box. Cooling: 1 °C to 15 °C; (max 30 °C below ambient) heating: 50 °C to 65 °C.

Existing Models

All GMK's

Notes

For pricing and lead time, please contact your local dealer or the Lift Solutions Team with specific product requirements.

Description

24V vacuum cleaner.

Existing Models

All GMK's

Notes

For pricing and lead time, please contact your local dealer or the Lift Solutions Team with specific product requirements.

Description

Seat covers for superstructure and carrier cab.

Existing Models

All GMK's

Notes

For pricing and lead time, please contact your local dealer or the Lift Solutions Team with specific product requirements.

ADBLUE CANISTER STORAGE

Description

Adblue canister storage.

Existing Models

All GMK's

Notes

For pricing and lead time, please contact your local dealer or the Lift Solutions Team with specific product requirements.

Description

For use in the event of a rope breakage.

Existing Models

GMK5250L-1

Notes

For pricing and lead time, please contact your local dealer or the Lift Solutions Team with specific product requirements.

EXTERNAL JUMP START CABLE WITH CLAMPS

Description

Jump start cable for external starting 12 m long with wire cross section of 70 mm².

Existing Models

All GMK's

Notes

For pricing and lead time, please contact your local dealer or the Lift Solutions Team with specific product requirements.

Description

Floor mats for carrier and superstructure cab.

Existing Models

GMK3050–GMK6400-1

Notes

For pricing and lead time, please contact your local dealer or the Lift Solutions Team with specific product requirements.

COUNTERWEIGHT ADAPTER

Description

Counterweight adapter to use the 5 t without 10t side weights. Including 60 t load charts.

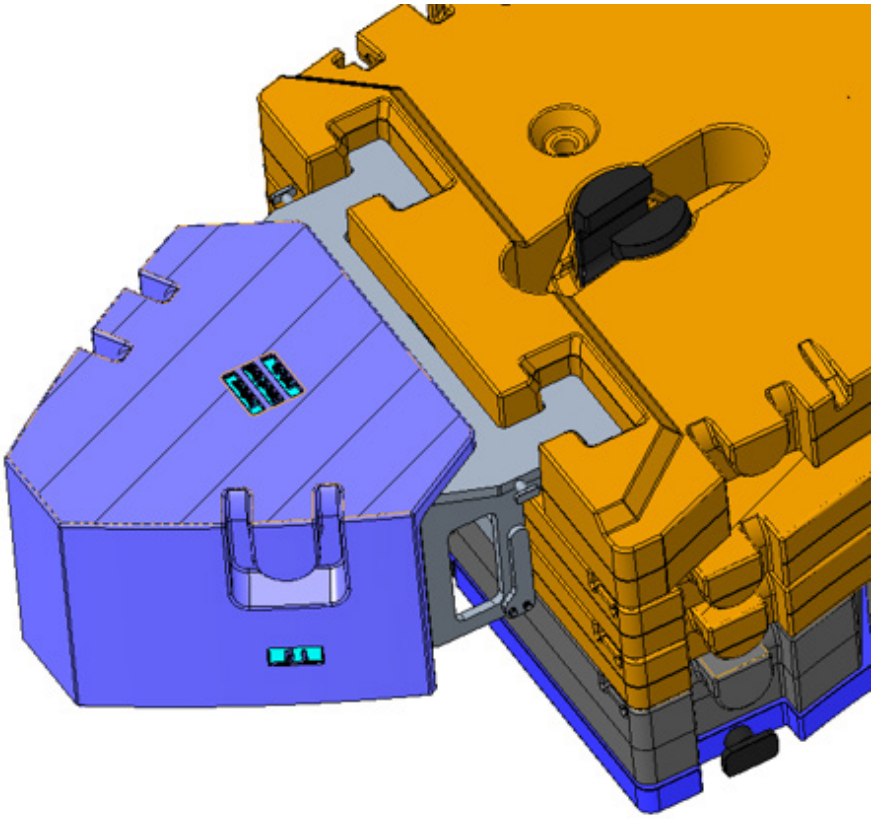

Existing Models

GMK5250XL-1

Notes

For pricing and lead time, please contact your local dealer or the Lift Solutions Team with specific product requirements.

Description

Foldable railings on the auxiliary hoist. Reduced transport height.

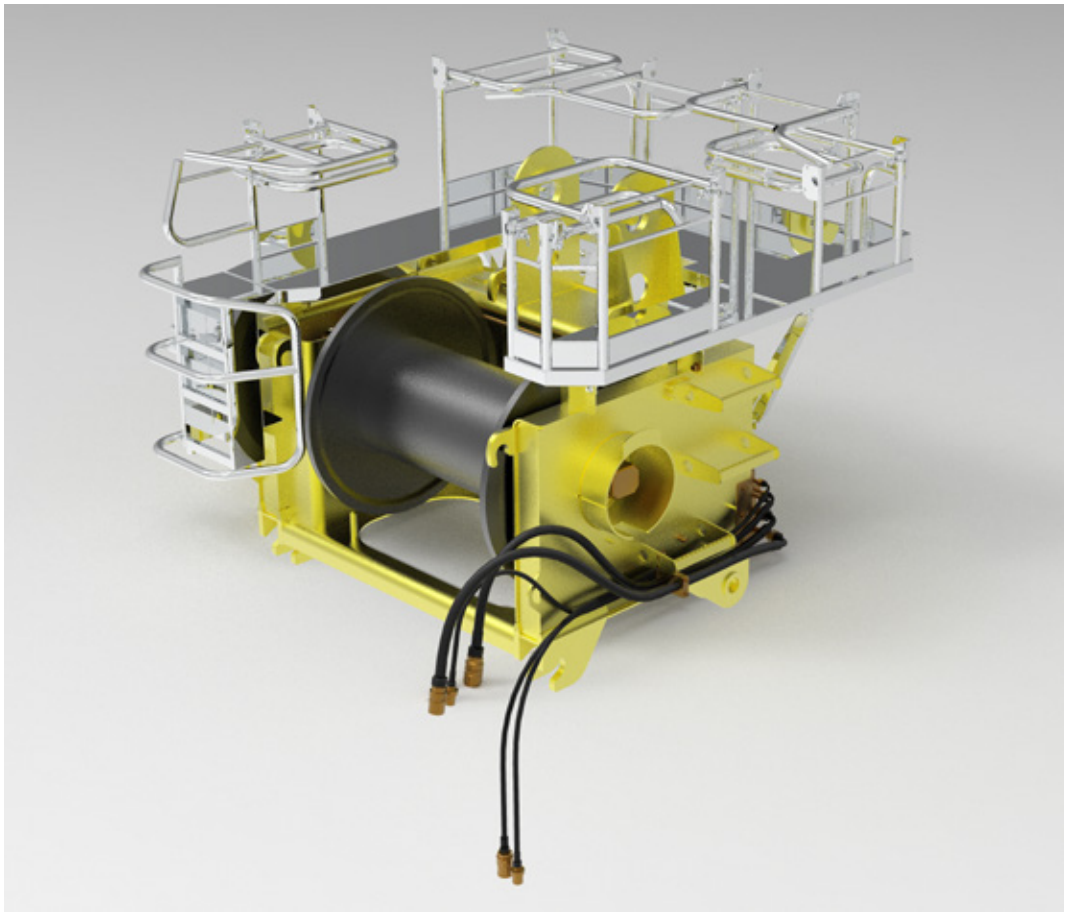

Existing Models

GMK6400-1

Notes

For pricing and lead time, please contact your local dealer or the Lift Solutions Team with specific product requirements.

ROPE PULLEY ON THE BOOM

Description

Rope pulley instead of sliding block on all telescope sections.

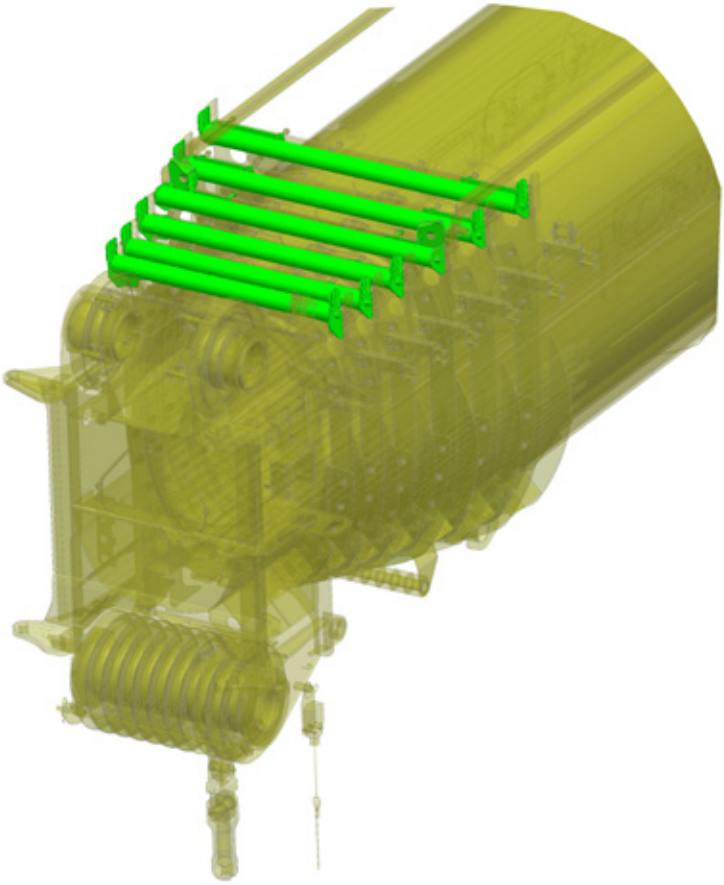

Existing Models

GMK5250L-1

Notes

For pricing and lead time, please contact your local dealer or the Lift Solutions Team with specific product requirements.

Description

LED pendant spotlight on the boom head.

Existing Models

GMK5250XL-1

Notes

For pricing and lead time, please contact your local dealer or the Lift Solutions Team with specific product requirements.

DRIVER CAB INSULATION INTERIOR

Description

Self adhesive mat to protect all windows in drivers cab against light and heat.

Existing Models

GMK5180/GMK5200/GMK5250L-1/GMK6300L-1/GMK6400-1

Notes

For pricing and lead time, please contact your local dealer or the Lift Solutions Team with specific product requirements.

Description

Fire suppression system for engine (carrier engine and/or super structure engine).

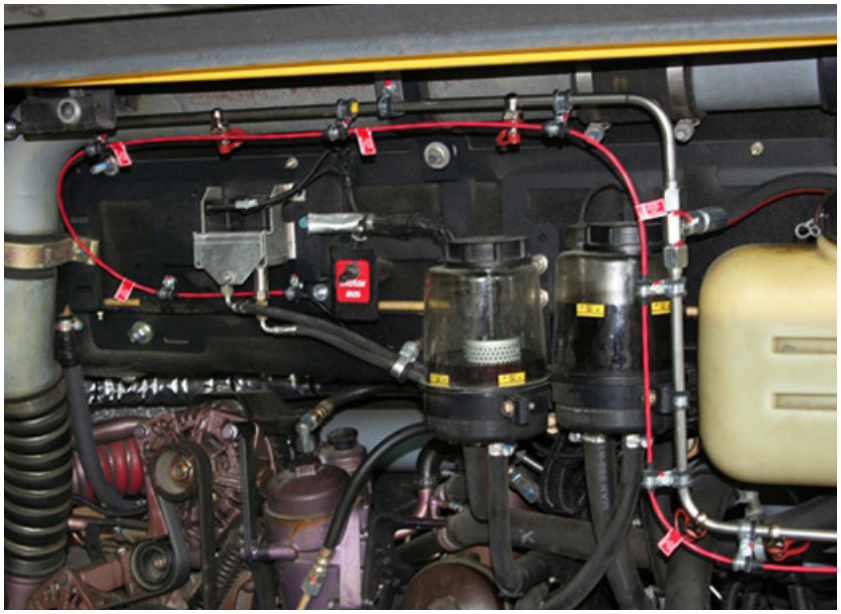

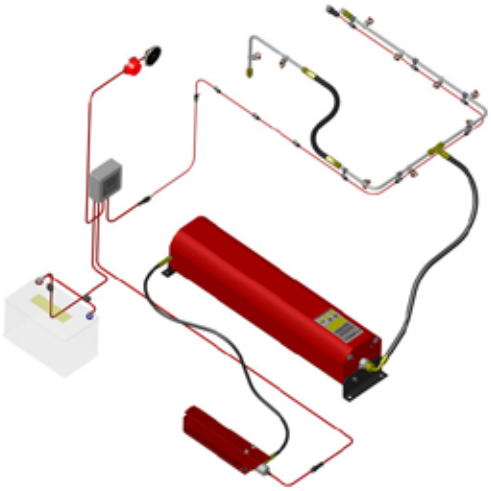

Existing Models

GMK5220

Notes

For pricing and lead time, please contact your local dealer or the Lift Solutions Team with specific product requirements.

RETRACTABLE FIELD LIGHTING

Description

Additional retractable field lighting.

Existing Models

GMK5250L-1/GMK5250XL-1/GMK6300L-1

Notes

For pricing and lead time, please contact your local dealer or the Lift Solutions Team with specific product requirements.

Description

Winter tyres Michelin Sno plus.

Existing Models

All GMK's

Notes

For pricing and lead time, please contact your local dealer or the Lift Solutions Team with specific product requirements.

COFFEE MACHINE

Description

Coffee machine in the driver cab.

Existing Models

All GMK's

Notes

For pricing and lead time, please contact your local dealer or the Lift Solutions Team with specific product requirements.

Description

Additional storage box in the driver cab.

Existing Models

GMK5250L-1/GMK5250XL-1/GMK6300L-1/GMK6400-1

Notes

For pricing and lead time, please contact your local dealer or the Lift Solutions Team with specific product requirements.

SMALL JUMP START SOCKET

Description

Small jump start socket.

Existing Models

All GMK's

Notes

For pricing and lead time, please contact your local dealer or the Lift Solutions Team with specific product requirements.

Description

The counterweight slices are detected by sensors and provide values to the crane operating system. The LMI System only allows rigging codes once the counterweight is detected.

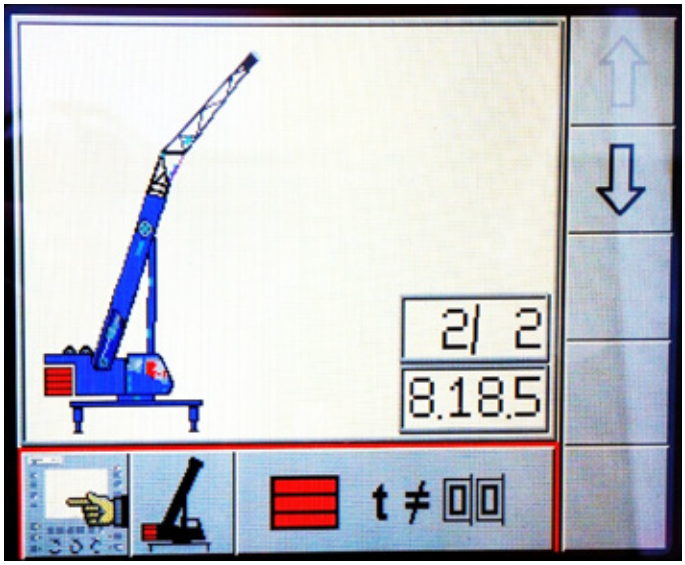

Existing Models

GMK6300L-1

Notes

For pricing and lead time, please contact your local dealer or the Lift Solutions Team with specific product requirements.

SCREEN SUN PROTECTION FILM

Description

Sun protection film for all SuperCab windows to reduce heat and solar radiation. Provides additional shatter protection.

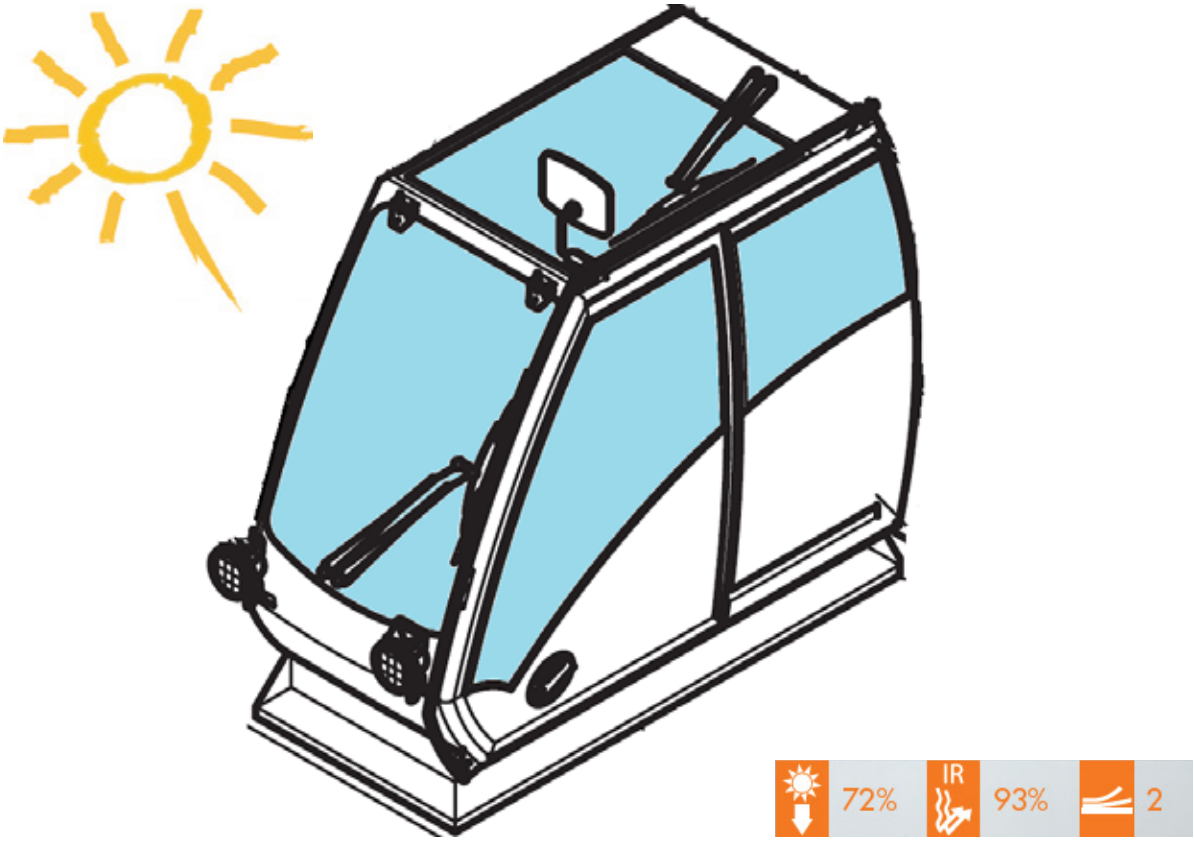

Existing Models

All GMK's

Notes

For pricing and lead time, please contact your local dealer or the Lift Solutions Team with specific product requirements.

Description

Electric extendible step tread.

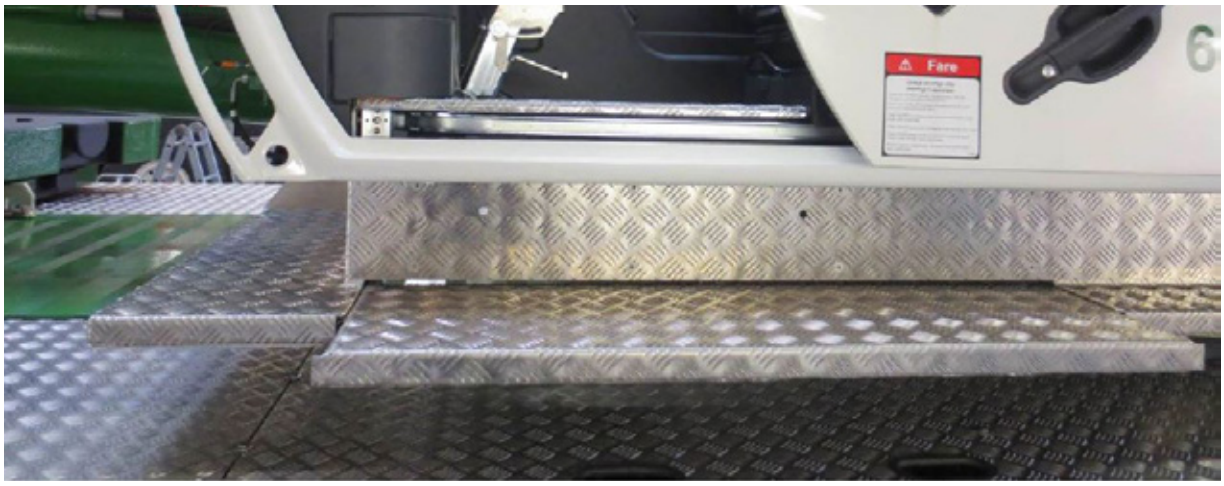

Existing Models

GMK6300L-1

Notes

For pricing and lead time, please contact your local dealer or the Lift Solutions Team with specific product requirements.

Description

Tray can be used as table or tablet holder.

Existing Models

GMK6300L-1

Notes

For pricing and lead time, please contact your local dealer or the Lift Solutions Team with specific product requirements.

Description

Front view camera for extended view from super structure cab for fixing hock block in road driving position.

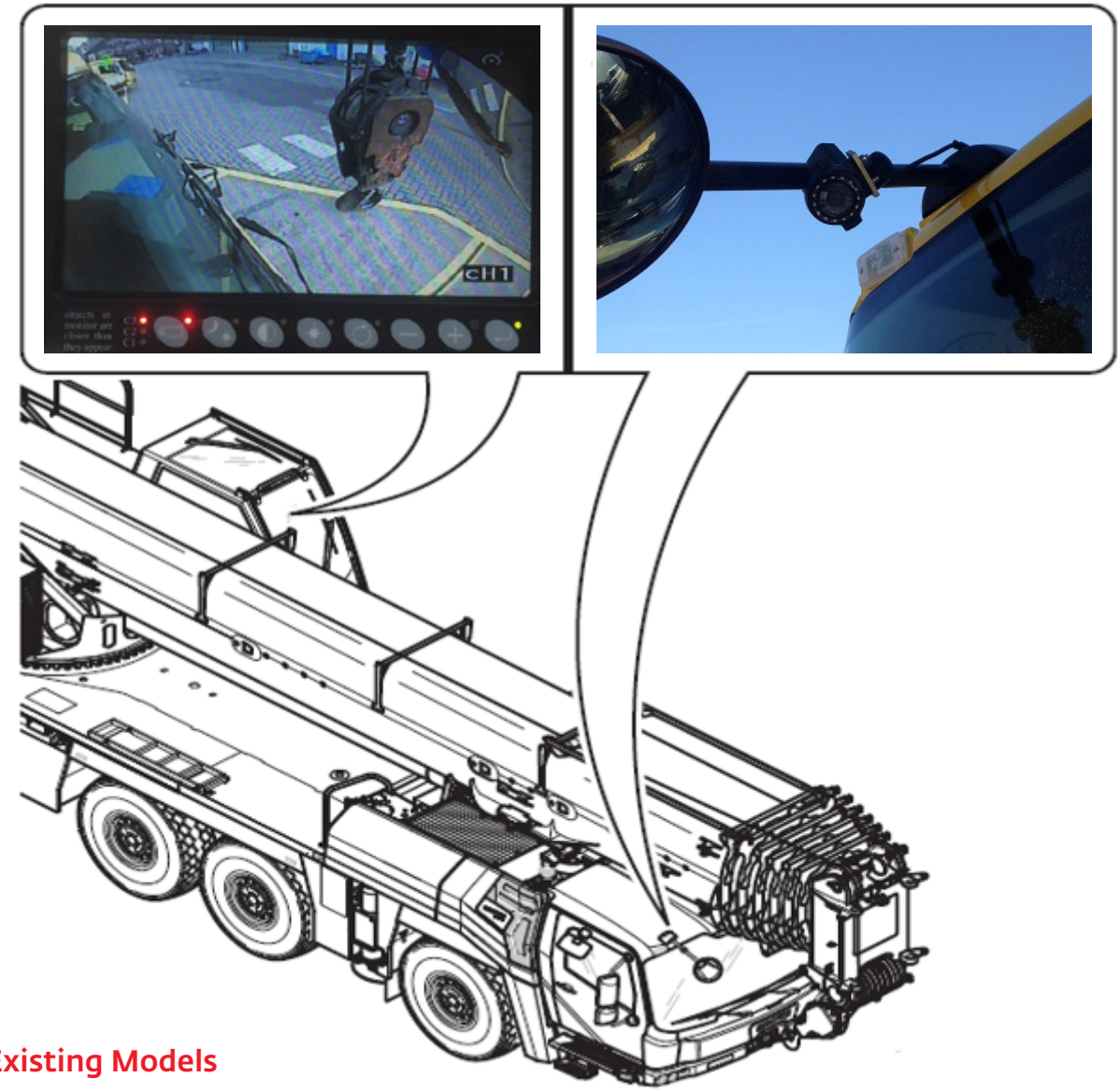

Existing Models

GMK5250L-1

Notes

For pricing and lead time, please contact your local dealer or the Lift Solutions Team with specific product requirements.

AUX HOIST ADAPTER

Description

Allows quick change between auxiliary hoist and compensation counterweight.

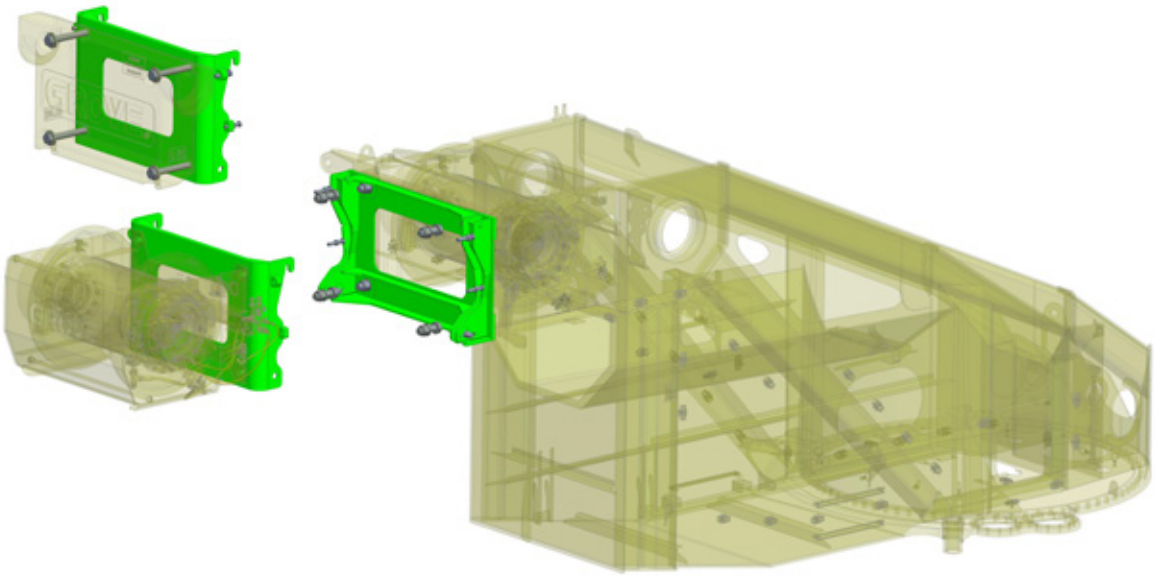

Existing Models

GMK4100L-2

Notes

For pricing and lead time, please contact your local dealer or the Lift Solutions Team with specific product requirements.

Description

Bio-Hydraulic Oil is a fully synthetic, quickly biodegradable hydraulic- and circulation oil based on synthetic esters. Due to its' quick biodegradability it does not pollute the soil or the water.

Panolin
HLP SYNTH 46

Shell
Naturelle HF-E 46

Avia
SYNTOFLUID N 46

Existing Models

ALL GMK's

Notes

For pricing and lead time, please contact your local dealer or the Lift Solutions Team with specific product requirements.

SPECIAL DRIVING CONDITION GMK6300L-1

Description

Driving 10 to per axle without boom and lifted second axle.

Existing Models

GMK6300L-1

Notes

For pricing and lead time, please contact your local dealer or the Lift Solutions Team with specific product requirements.

Description

Driving without boom and turned superstructure to rear. Total weight 40 t.

Existing Models

GMK5250XL-1

Notes

For pricing and lead time, please contact your local dealer or the Lift Solutions Team with specific product requirements.

BI-LED HEADLIGHTS

Description

Bi-LED headlights.

Existing Models

All GMK's

Notes

For pricing and lead time, please contact your local dealer or the Lift Solutions Team with specific product requirements.

Description

On industrial construction sites, the crane can carry a counterweight of up to 21,1 t.

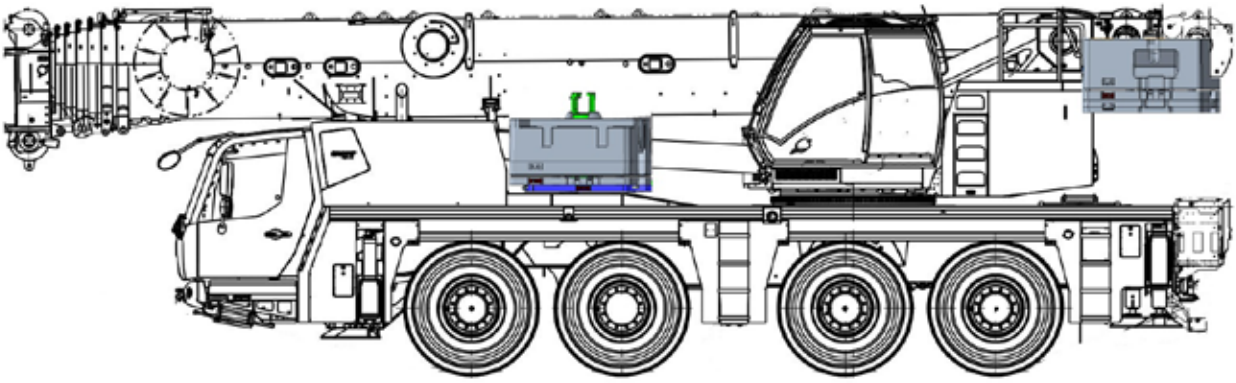

Existing Models

GMK4100L-2

Notes

For pricing and lead time, please contact your local dealer or the Lift Solutions Team with specific product requirements.

BATTERY ISOLATOR

Description

Switch up activates the emergency stop chain. All electrical components are be deactivated smoothly. After 5 minutes the batteries are also be disconnected via a relay so that the crane is completely switched off.

Existing Models

GMK5250XL-1

Notes

For pricing and lead time, please contact your local dealer or the Lift Solutions Team with specific product requirements.

Description

Storage box, voltage converter, coffee machine and kettle in the driver's cab.

Existing Models

GMK6400-1

Notes

For pricing and lead time, please contact your local dealer or the Lift Solutions Team with specific product requirements.

Manitowoc Cranes

Regional headquarters

Americas
Milwaukee, Wisconsin, USA
Tel: +1 414 760 4600

Shady Grove, Pennsylvania, USA
Tel: +1 717 597 8121

Europe and Africa
Dardilly, France - TOWERS
Tel: +33 (0)4 72 18 20 20

Wilhelmshaven, Germany - MOBILE
Tel: +49 (0) 4421 294 0

APAC
Shanghai, China
Tel: +86 21 6457 0066

Singapore
Tel: +65 6264 1188

Middle East and India
Dubai, UAE
Tel: +971 4 8862677

This document is non-contractual. Constant improvement and engineering progress make it necessary that we reserve the right to make specification, equipment, and price changes without notice. Illustrations shown may include optional equipment and accessories and may not include all standard equipment.

©2022 The Manitowoc Company, Inc.

Printed in France
Form No LiftSolutions
Part No 01-October2022